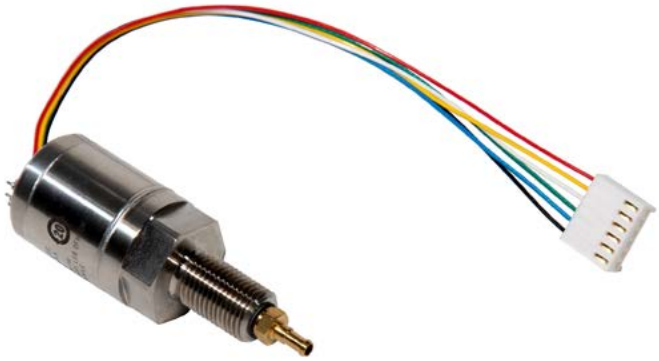

RPS8100-Meteo

High performance barometer

Stability of measurement technologies reduces operating costs and increases confidence in weather station data and operations. The RPS8100-Meteo has been developed by Druck to support the automated weather station market.

Combining Class 1 barometer accuracy and exceptional stability, with compact size, the RPS8100-Meteo meets the most demanding of automated weather station specifications for national and global observation networks and airport operations.

Druck RPS8100-Meteo barometric pressure sensor use a unique resonating silicon technology with inherent precision and stability, known as TERPS Trench Etched Resonant Pressure Sensor.

Established in the marketplace for more than 10 years, TERPS technology has been proven to be stable over long periods of time, backed up by customer testimony.

Druck TERPS technology has many qualities which surpass the technologies referenced for use as electronic barometers in the WMO guide. The stability achieved through the use of TERPS technology gives the RPS8100-Meteo long calibration intervals and offers resistance to humidity and density impacts, making field calibration easier.

Features:

- Pressure range 500 to 1150 hPa (14.75 to 34 inHg)
- High stability ±0.05 hPa per year typical
- Precision ±0.1 hPa Including all errors: NLHR (non linearity, hysteresis, and repeatability), zero & span setting, and thermal error
- Output 4.5 V TTL square wave. Frequency 25 to 40 kHz.
- Two compact barb-fitting options for integration into weather stations

Specifications

Measurement

Pressure ranges

- 500 to 1150 hPa (14.75 to 34 inHg)

Overpressure

- 2x FS

Pressure containment

- 7000 hPa

Supply voltage

- 5 to 28 Vdc

Current consumption

- <3.5 mA

Jitter

- <20 ns

Performance signal output

- Format: 4.5V TTL square wave
- Limits: 25 to 40 kHz
- Sensitivity: 1.4 Hz/hPa minimum

Temperature signal output

- Format: Voltage
- Limits: 0.4 to 0.8 V
- Sensitivity: -1.6 to -2.6 mV/°C

Media compatibility

Non-condensing dry gases compatible with silicon dioxide, fluorosilicone RTV adhesive, stainless steel 316L and glass.

Electrical connection

- Electrical cable type
- PTFE sheathed flying leads with MOLEX 22-01-3067 connector
- Electrical cable dimensions
- Length 150mm minimum

Performance specification

Total precision

- ± 0.1 hPa

Traceable accuracy

- ± 0.14 hPa

Long term stability

- ± 0.01% FS/annum maximum
  Typical 0.05 hPa per annum

Compensated temperature range

- -40 to 85°C

Storage temperature range

- -55 to 125°C

Pressure connector

- M12 x 1.5 bulkhead with removable barb fitting
- 4 mm compact barb fitting

Ordering information

Reference the table below when placing an order for the RPS8100-Meteo.

Part Number	TERPS Exposed Calibrated Range	Pressure Connector
RPS8100-1-Meteo	500 to 1150 hPa a	M12x1.5 Bulkhead
RPS8100-2-Meteo	14.75 to 34 in Hg a	M12x1.5 Bulkhead
RPS8100-3-Meteo	500 to 1150 mbar a	M12x1.5 Bulkhead
RPS8100-4-Meteo	500 to 1150 hPa a	⌀4 Hose Barb Fitting
RPS8100-5-Meteo	14.75 to 34 in Hg a	⌀4 Hose Barb Fitting
RPS8100-6-Meteo	500 to 1150 mbar a	⌀4 Hose Barb Fitting

Electrical connections

Refer to the below table for information about the electrical connections available for the RPS8100-Meteo.

Wiring details		
Function	**Wire color**	**MOLEX Position**
+VE Supply	Red	PIN 1
Frequency	Yellow	PIN 2
-VE Temp signal	White	PIN 3
+VE Temp signal	Green	PIN 4
-VE Supply	Blue	PIN 5
EEPROM	Black	PIN 6
No screen connection		

Dimensional drawings

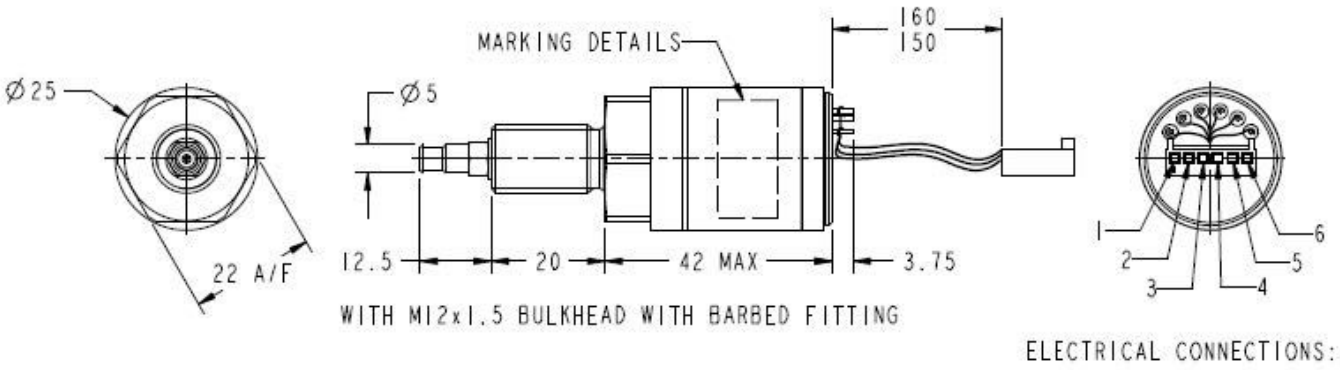

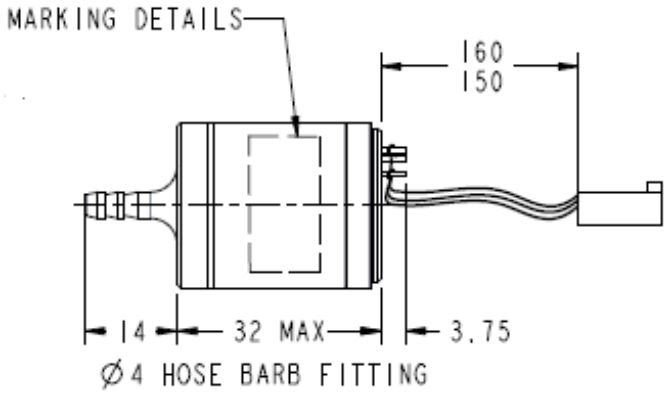

Notes:

All dimensions are nominal lengths and are subject to change.

All dimensions are in millimeters.

Other pressure and electrical connectors may be available. Please contact Baker Hughes.

2026 Copyright by Druck Limited. All rights reserved.

920-717C

BHCS39520A (03/2026)

Druck

druck.com